Ficha Técnica

article#	**23151279**
article description	**CEE-plug 16A 5p 6h IP67 SHARK**
description long	CEE-plug 16A 5p 6h IP67 SHARK housing material: PA6 rated current: 16A number of poles: 5 (3P+N+PE) clock-position: 6h rated voltage/frequency: 200/346V~ - 240/415V~ / 50+60Hz contacts: brass connection technology: screw terminals IP protection class: IP66/IP67
GTIN (EAN)	9003399052361
country of origin	AT
customs number	85366990
packaging quantitiy	10
minimum order quantitiy	10

ETIM 7.0	EC000140
IEC-amperage	16 A
Number of poles	5
Voltage acc. EN 60309-2	400 V (50+60 Hz) red
Clock hour position	6 h
Identification colour	Red
Degree of protection (IP)	IP67
Connection system	Screwed terminal
Cable entry	Swivel
Angle of plug	Straight
Material	Plastic
Contact material	CuZn
Surface treatment contacts	Untreated

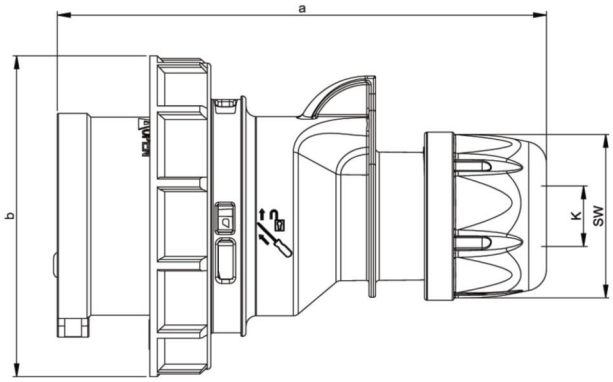

a	134 mm
b	87 mm
K (cable Ø)	8-16 mm
SW	42 mm
wire flexible	1-2,5 mm²
contact screws	100 Ncm
strain relief	500 Ncm
dismantling length	50 mm
stripping length	10-12 mm

Descargá el catálogo

Santa Rita 8220 (B1657ATD) – Loma Hermosa, 3 de Febrero, Bs. As. - info@conextube.com